REVISIONS			
REV.	DESCRIPTION	DATE	APPROVED
A	Production Released Per ECN 6016	6/18/81	

PROPRIETARY INFORMATION

THE INFORMATION CONTAINED HEREON IS PROPRIETARY INFORMATION TO L.H. RESEARCH, INC. AND SHALL NOT BE DISCLOSED TO PERSONS AND/OR ORGANIZATIONS OR REPRODUCED, COPIED OR USED AS A BASIS FOR MANUFACTURE OR SALE OF EQUIPMENT OR DEVICES WITHOUT WRITTEN PERMISSION.

INSTRUCTION MANUAL

REGULATED POWER SUPPLY 670-682824

LHR MODEL TM40

FOR REFERENCE ONLY
THIS DOCUMENTATION IS
UNCONTROLLED
CHANGE NOTIFICATION
WILL NOT BE MAINTAINED

REV.	A	A	A	A	A	A	A	A	A	A	A	A	A	A	A	A
PAGE	1	2	3	4	5	6	7	8	9	10	11	12	13	14	15	16

A	A	A	A	A													
17	18	19	20	21	22	23	24	25	26	27	28	29	30	31	32	33	34

REVISION STATUS

DRAFTSMAN H. Dreschel	DATE 4/15/81	LH RESEARCH	14402 Franklin Ave. Tustin, CA 92680 714-730-0162	
CHECKER L. Hutchison	4/8/81	INSTRUCTION MANUAL MODEL TM40		
APPR. J. Rhey	6/6/81			
TOLERANCE .XX- .XXX ANGLE		DWG A SIZE	PRODUCT CODE 47	DWG NO. 847682-000 REV. A
NEXT ASS'Y / USED ON				
APPLICATION	UNLESS OTHERWISE SPECIFIED ALL DIMENSIONS ARE IN INCHES	SCALE		Page 1 of 21 Pages

TABLE OF CONTENTS

Section

Specifications 3-5

Introduction.....6

Theory of Operation.....6-12

Installation and Operation.....13-17

Troubleshooting.....18-20

Schematic 21

Supplement (When Applicable)

SPECIFICATIONS

Input Voltage: 115VAC, 92-130VAC, 47-450Hz.
230VAC, 184-260VAC, 47-450Hz.

Output Voltages: Voltages and load current ratings are given in the following table:

Table 1

Output Voltage	Rated Load Current (Amps)
2	40
5	40
12	16
15	13
18	11
24	8
28	7

Line Regulation: 0.4% on output over entire range.

Load Regulation: 0.4% for no load to full load.

Interaction: 0.1% maximum (static).

Ripple and Noise: 1% P-P or 50mV, whichever is greater.

Overvoltage Protection: Factory set at 125±5%.

Overshoots and Undershoots: 2% peak deviation for a 25% load change at 5A/μs.

Response Time: 200μs to 1% after a 25% load change at 5A/μs.

Holdup Time: Output remains in regulation for a minimum of 20Ms after loss of nominal AC power.

Operating Temperature: Full load 0°C to 50°C with natural convection. Derated to 50% of nominal power at 70°C (see derating curve).

Power Derating Curve

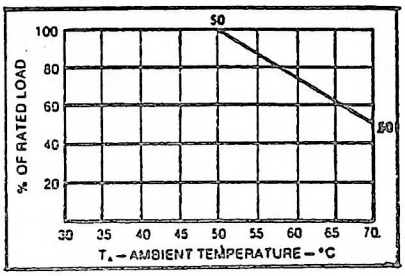

Efficiency: 70% nominal

Input Connections: Provided through barrier strip for AC input, sense, power fail and remote on-off.

Output Connections: DC output is through two brass nickel plated 10-32 studs.

Output Polarity: Output is independent and floating and may be referenced as desired. The output may be floated up to 100V off chassis ground.

Remote Sense: Compensates for up to 250 mV of lead cable drop on the main output. Output is internally sensed if the sense leads are open.

Reverse Voltage Protection: Output has reverse voltage protection up to 100% of rated current.

Power Fail Signal: One-cycle ride-through (16Ms) occurs before power fail is signalled.

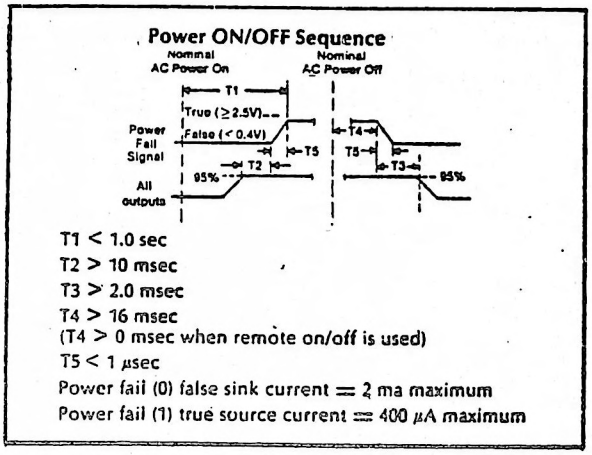

Remote On/Off: Power supply is turned on with open circuit or with TTL logic "1" and is turned off with TTL logic "0" (800 Mv maximum) sinking 400μA referenced to negative sense terminal.

Current Limit: Output has foldback current limit with automatic recovery after overload is removed.

Temperature Coefficient: ±0.02%/°C.

Storage Temperature: -55°C to +85°C.

INSTALLATION AND OPERATION

1. The power supply is supplied with mounting provisions that use (3) 8-32 screws.

   NOTE: This power supply is designed for convection cooling. Do not restrict cooling air flow.

2. Input voltage requirements are 92-130VAC or 184-260VAC, 47-450Hz internally selectable, by switch S1. See Figure 6. For 115VAC operation, place S1 in the 115 position and make certain that F1 is a 6A fuse. For 230VAC operation, place S1 in the 230 position and make certain that F1 is a 3A fuse.

3. Connect selected input voltage to TB1, AC IN to terminal 1, ACC IN to terminal 2 and ground to terminal 3.

4. The main voltage V1 output with remote sense can compensate for up to 250mV drop in the leads. To determine the minimum size wire, divide 0.25V by the output current, then divide by the total length of wire in thousands of feet. This gives Ohms per 1000 feet, and a wire table may be consulted to determine the appropriate wire size needed. Some examples are included in the following table:

AWG	OHMS PER 1000 FT. @20°C.
6	0.3951
8	0.6282
10	0.9989
12	1.588
14	2.525
16	4.016
18	6.835

   Typical Example:

   5V @10-20A supply connected to the load with 4 foot wires, (with 8 ft. total = .008 thousand ft.), #12 wire would be used to insure less than 250mV drop.

5. Connect plus (+) output stud (main output) to (+) point on load. Connect minus (-) output stud to (-) point on load.

6. Power supplies are shipped with the sense leads connected for local sensing.

   NOTE: Step 7 will show how to connect for remote sensing.

7. Connect the +S TB1 terminal 6 (plus sense supply) lead to the (+) point on the main power buss or load.

   Connect the -S TB1 terminal 7 (minus sense supply) lead to the (-) point on the main power buss on load.

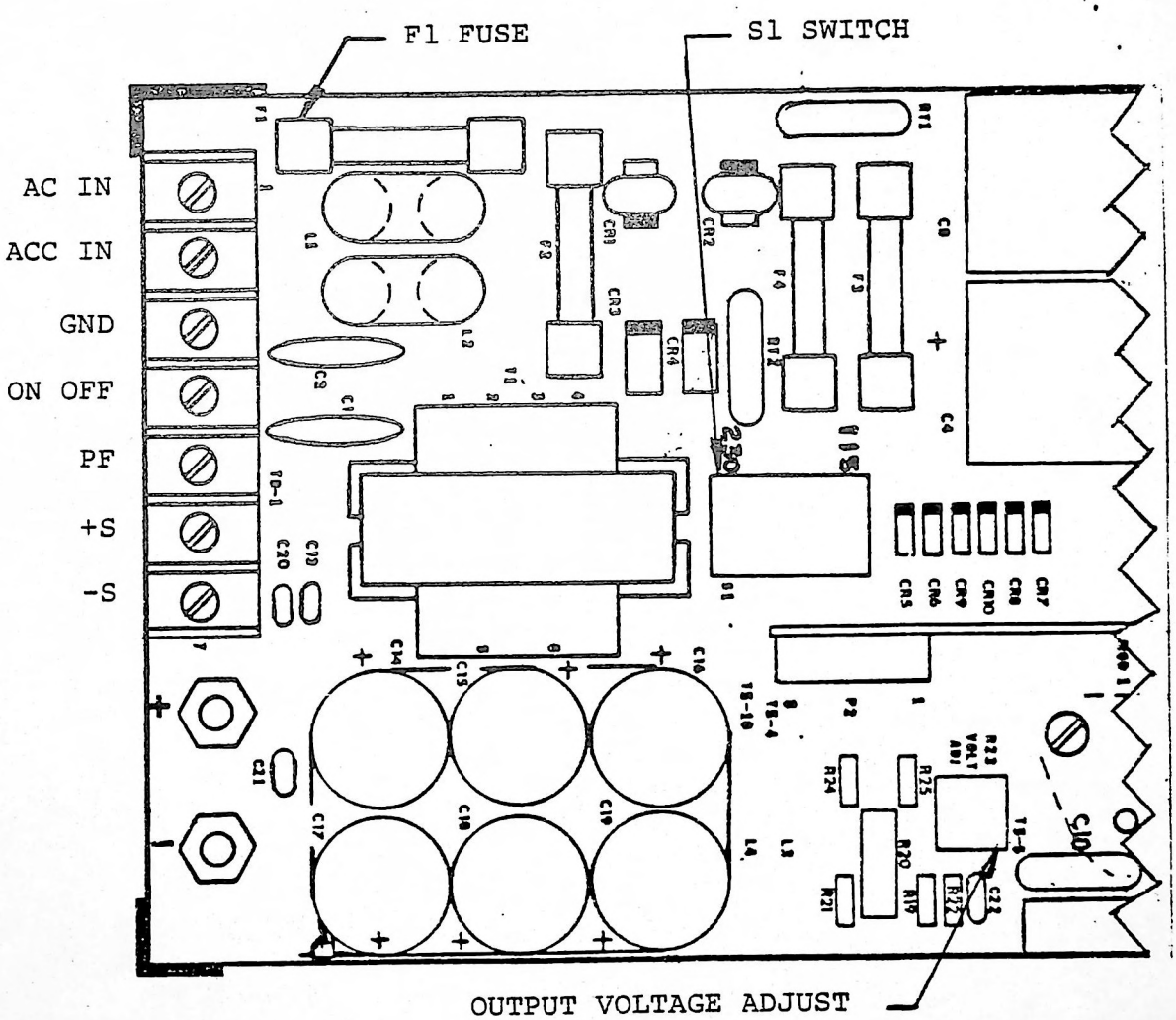

Hookup/Adjustments
Figure 6

NOTE: Sense leads are #22 or #24 twisted pair and must not exceed 10 feet in length.

CAUTION: IF POLARITY OF THE SENSE LEADS ARE REVERSED, THE CONTROL SECTION OF THE POWER SUPPLY WILL BE DAMAGED.

8. Connect power fail lead to TB1 terminal 5. This signal output is referenced to the main output (-) sense.

9. Remote On/Off control function is connected to TB1 terminal 4. The power supply is turned on with open circuit or with TTL logic "1" and is turned off with TTL logic "0" (800mv max.) sinking 400μA referenced to negative sense.

10. Adjust output voltage adjust potentiometer R23 to increase or decrease output voltage. Do not operate the power supply outside its nominal range.

11. Perform the following steps before operating the TM40 power supplies in parallel.

A. Adjust the main output voltage of each power supply within 0.1% of the other. These adjustments must be accomplished at 80 to 90% of full load, with the sense leads tied at the output terminals. The output voltage should be set high enough to allow for the estimated drop in the conductors, (due to load current) beyond the sense terminals.

B. Adjust the current limit on each power supply for 90 to 100% of the rating.

C. The procedures outlines above will insure that the power supplies connected in parallel will share the load current reasonable well throughout its operating range and result in maximum reliability.

D. The connection diagrams for power supplies operating in parallel are shown in Figure 7.

NOTE: The adjustments described in the following steps are preset at final test and are for information only. Consult factory when requirements change. Changes in adjustments can cause loss of protective features of this power supply.

ACCEPTABLE *Annehmbar*

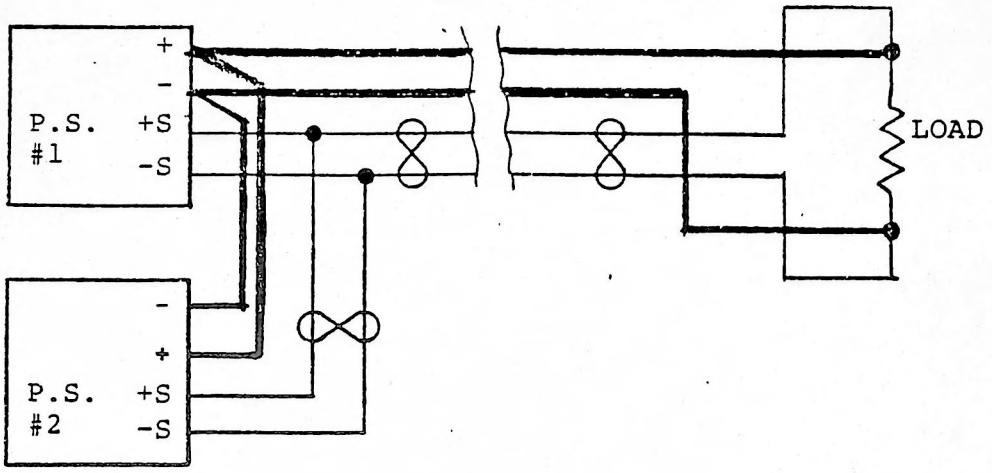

PREFERRED *Vorzugsweise*

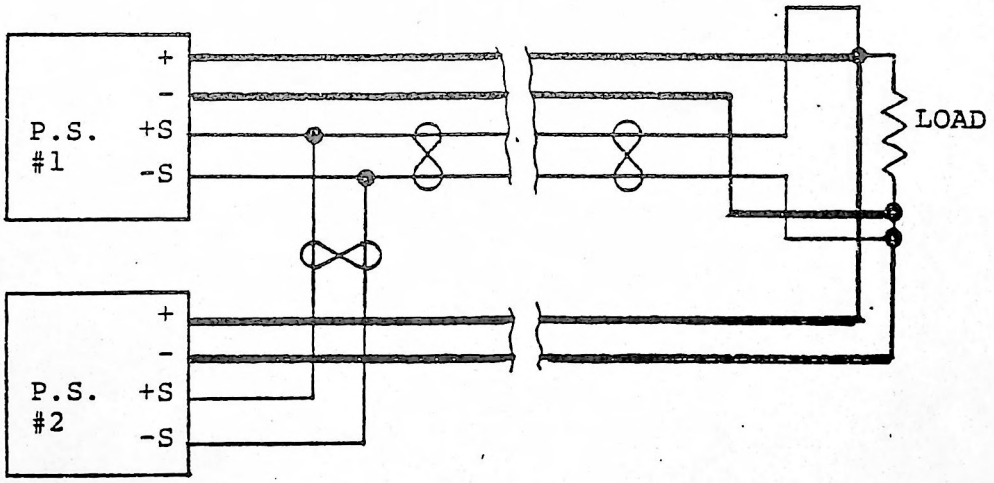

NOTE: Load conductors should be same size and length, for proper load sharing.

Typical Parallel Diagram
Figure 7

12. Adjust VOLT ADJ pot R23 clockwise until the output reaches about 20% high. Turning pot R23 on the control module clockwise will make the OVP circuit trigger at a higher voltage. The minimum trigger point is around 20% high. This adjustment is most easily made when the output is loaded to less than 50% of rating.

13. With the line set at 115VAC, adjust the current limit pot R18 until the output begins to fall with output loaded for 110% of total power. This power level should be maintained for no longer than 30 seconds while making this adjustment.

    CAUTION: OVER CURRENT PROTECTION FOR THE OUTPUT IS PROVIDED ON THE PRIMARY CURRENT SENSE. ALTHOUGH THE OUTPUT IS PROTECTED AGAINST OVERLOAD INCLUDING SHORT CIRCUIT ACROSS ITS OUTPUT TERMINALS, DAMAGE MAY RESULT IF THE OUTPUT IS OPERATED BEYOND ITS SPECIFIED RATING.

14. Connect scope probe to TB1 terminal 5. Adjust scope for 2V/Cm, 5MS/CM, external trigger. Adjust scope to trigger at AC line turn-off. Adjust power fail pot R9, on the control module, until delay between line turn-off and power fail signal fall is greater than 16 Ms. (See specifications).

TROUBLESHOOTING

1. General

This section describes troubleshooting test analysis routine, and some procedures that are useful in servicing this power supply. Refer to the section on specifications for minimum performance standards.

2. Troubleshooting Procedures

No output voltage will probably be the most common failure mode of this power supply. Make certain the following items are checked before proceeding further:

A. Check to make sure the supply is properly hooked up.

B. Check the AC input voltage at the AC input terminals.

C. Check that switch S1 is in the 115 position, when 115VAC input is connected and in the 230 position when 230VAC input is connected.

D. Remove the load from the supply to see if the supply will come up under a no-load condition. If it does, this would indicate there may be a short or overload condition in the load.

3. Troubleshooting Output Filter and Power Output Section

Shorts in the power output section can be determined with an ohmmeter.

Set the meter at the Rx 1 scale. Touch the plus lead to the plus output and the minus lead to the minus output.

Under normal conditions, there should be partial meter deflection and then a gradual increase in resistance as the meter will be charging the output filter capacitors.

If there is an internal short, the meter will read a very low resistance. When the meter leads are reversed, you will normally read a very low resistance because of the low forward resistance of the rectifiers. If a short is present, this could mean a shorted output rectifier or a shorted output filter capacitor. To check the rectifiers it will be necessary to remove the rectifier from the power supply assembly. The rectifiers can then be checked with an ohmmeter.

WARNING: ALWAYS MAKE SURE THE POWER SUPPLY HAS BEEN TURNED OFF FOR AT LEAST TWO MINUTES BEFORE WORKING INSIDE THE UNIT TO ALLOW THE VOLTAGE TO DISCHARGE FROM THE INPUT CAPACITORS.

4. Troubleshooting Input Section

Check the internal AC fuse and if blown, replace with the same type and value. If the fuse blows again, it indicates a short in the AC input section.

If the supply continues to blow the AC input fuse when power is applied, check the four (4) input power rectifiers mounted on the PC board with an ohmmeter. Check the input filter capacitors for possible shorted conditions.

If the AC is present to the rectifiers and the high voltage is missing at the filter capacitors, check for an open thermistor. The proper voltage across the input capacitors C4 and C8, with nominal input voltage, should be about 150 volts DC across each capacitor. If there is no voltage across the input capacitor, check for an open connection. Examine the thermistors RT1 and RT2. The resistance of these thermistors should read about 2.5 ohms when cool.

If normal voltage is present on input capacitors, check the DC fuses between the high voltage capacitors and the power transistors. If open, it will most likely indicate a power transistor failure or an internal short. Check the power transistors and clamp diodes for shorts. A shorted clamp diode maybe the cause of power transistor failure.

If a replacement power transistor is required, it is recommended that they are all replaced with a new tested set from LH Research. For optimum performance, the set is matched for storage time and switching speed.

When replacing power transistors, make certain the insulators are thoroughly greased with a thermal compound, and the mounting surfaces are free of burrs and foreign materials. Recheck the clamping diodes across emitter to collector of the power transistors to be sure none are shorted. Check the power transistor base voltage waveforms per step 5.

5. Check Power Transistor Base Voltage Waveforms

Set oscilloscope vertical sensitivity to .5V/Div. Set Sweep to 5 μs/Div. Remove the internal fuses F3 and F4. This will remove the 300 volts from the power switching transistors.

CAUTION: BEFORE MAKING ANY OSCILLOSCOPE MEASUREMENT, ISOLATE THE SCOPE CHASSIS FROM THE AC LINE WITH AN ISOLATION PLUG OR TRANSFORMER. MAKING SURE THAT THE SCOPE CHASSIS IS ISOLATED FROM EARTH GROUND. SCOPE CHASSIS MAY BE ELECTRICALLY HOT WHILE MAKING THE FOLLOWING MEASUREMENTS.

Observe the Q1 and Q2 base-emitter voltage waveform by hooking scope across R4 and R10 with scope ground on emitter side of Q1 and Q2. See Figure 5 for proper waveform. Turn the AC power off and replace the DC fuses F3 and F4.

If no basic voltage waveforms are present, check the +24 volts on the control board. With reference to the minus main output terminal, the 24 volts should be between 22 and 25 volts.

If the voltage is low or none, check fuse F2. If the fuse is open, check CR 5, 6, 7, 8, 9 and 10 for possible short. If the diodes are good, replace F2 with same type and value.

If the fuse blows again or the base voltage waveforms are not present, the unit should be returned to the factory for repairs.

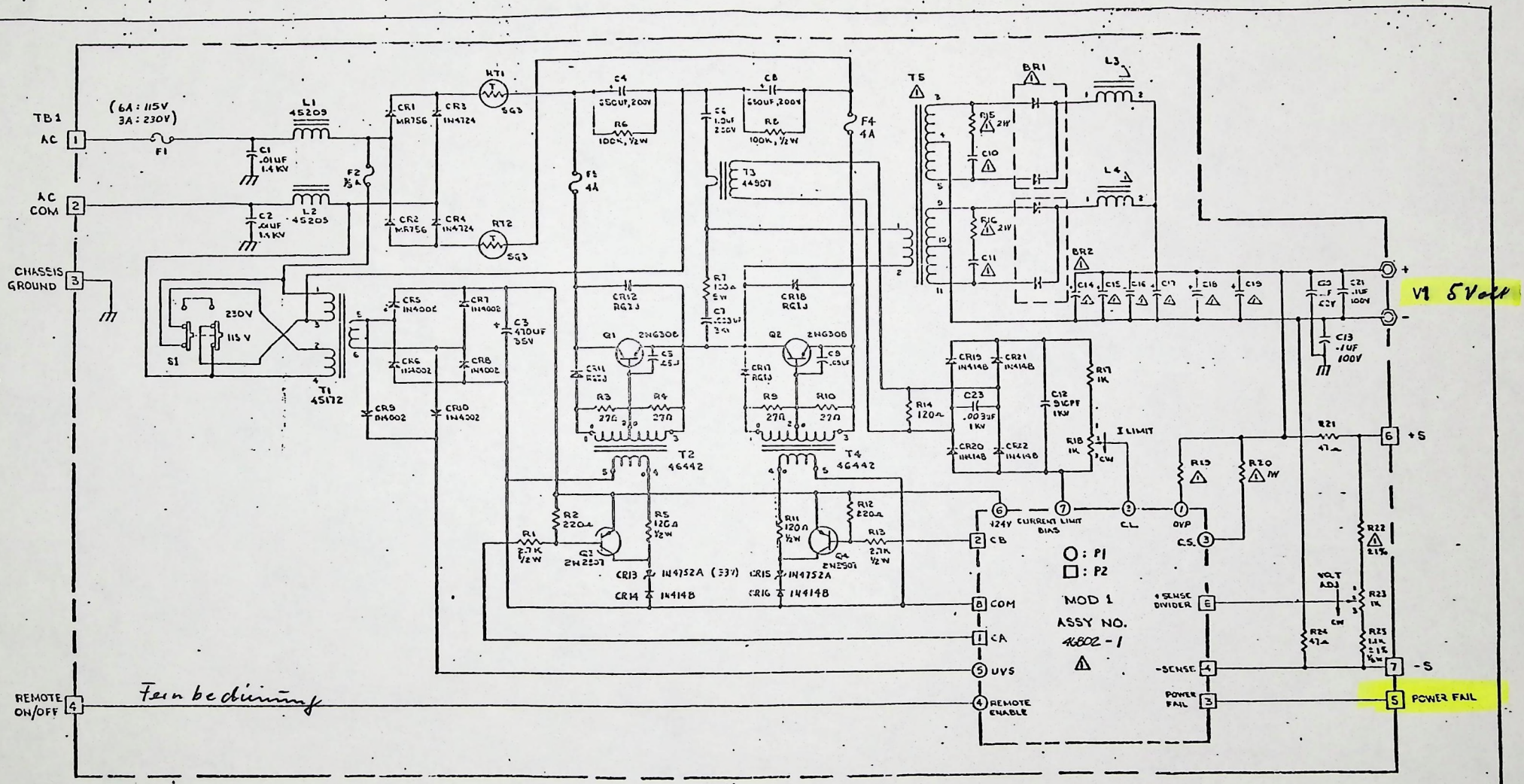

REF: 46322 REV. B

3. ALL RESISTOR ARE 1/4W. ±5%
2. SYMBOL ○ DENOTES P1, □ DENOTES P2
1. COMPONENT VALUES VARY WITH OUTPUT VOLTAGE, REFER TO ASSY DWG. NO.

NOTES: UNLESS OTHERWISE SPECIFIED

DRAFTSMAN: D. LOWRY		RESEARCH
CHECKER:		SCHEMATIC POWER SUPPLY
B	847682-000	A
		PAGE 21 OF 21 PAGES